VOITH TURBO

Voith-EPA-System

Variable flow rate from constant-flow pumps

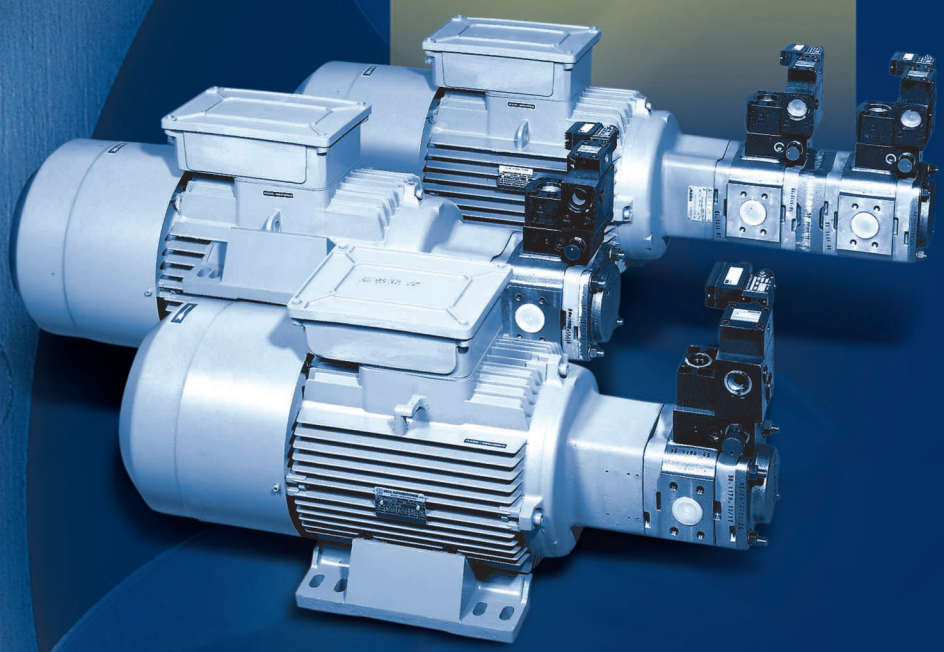

Voith EPA System
Variable flow rate from constant-flow pumps

Principle

Energy-saving hydraulic assembly for producing variable flow rates from speed-controlled constant-flow pumps in the combination: frequency converter – three phase asynchronous motor – Voith internal gear pump.

Application example
Plastics injection moulding machine (Battenfeld)
The Voith EPA assembly is integrated in the machine – control with the aim of achieving energy-saving operation.

Benefits

- High specific power by favourable ratio between installed power and permissible operating pressures (up to 350 bar).
- Easy integration into machine installation control concepts.
- Low noise level by the use of Voith internal gear pumps with low pressure pulsation and low flow pulsation; also speed reduction during part-load and standby modes.
- High overall efficiency with low hydraulic power loss and low cooling circuit requirements.
- No starting current peaks due to current limiting on the frequency converter.
- Low installation costs due to small pump sizes, utilizing the maximum permissible intake speeds. No servo pumps are required.
- Economies with servo and control valves in the machine installation due to the sensitive adjustment of flow rate and pressure with the EPA assembly.

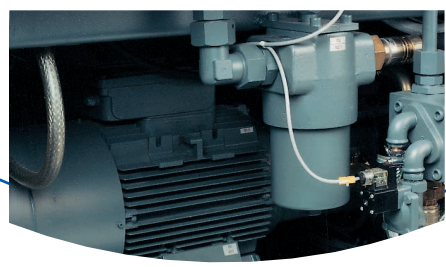

Application example
Plastics injection moulding machine type Ecologica
from MIR, Italia with speed-controlled constant-flow pumps Voith IPV.

Voith EPA System
Operating principle

The Voith Electric motor-Pump Assembly produces a variable flow rate by changing the drive speed of a constant-flow pump, ie. the delivery rate required by the consumer is the product of displacement and speed.

$Q = V_g \cdot n$

The speed change is achieved by changing the supply frequency of the three phase asynchronous motor by means of the frequency converter. Processed in the frequency converter control unit are the nominal values for speed, maximum motor current and actual values.

Minimal change times for speed and therefore flow rate are achieved with the vector-controlled frequency converter in combination with speed feedback (rotary transducer).

Speed changes with ramps and smooth cycle transitions can be preset at the frequency converter control unit to permit smooth acceleration or deceleration of hydraulic cylinders or motors and hence the moving parts of the machine.

Other control and regulation functions are possible via pressure relief valves, proportional pressure relief valves and flow-control valves.

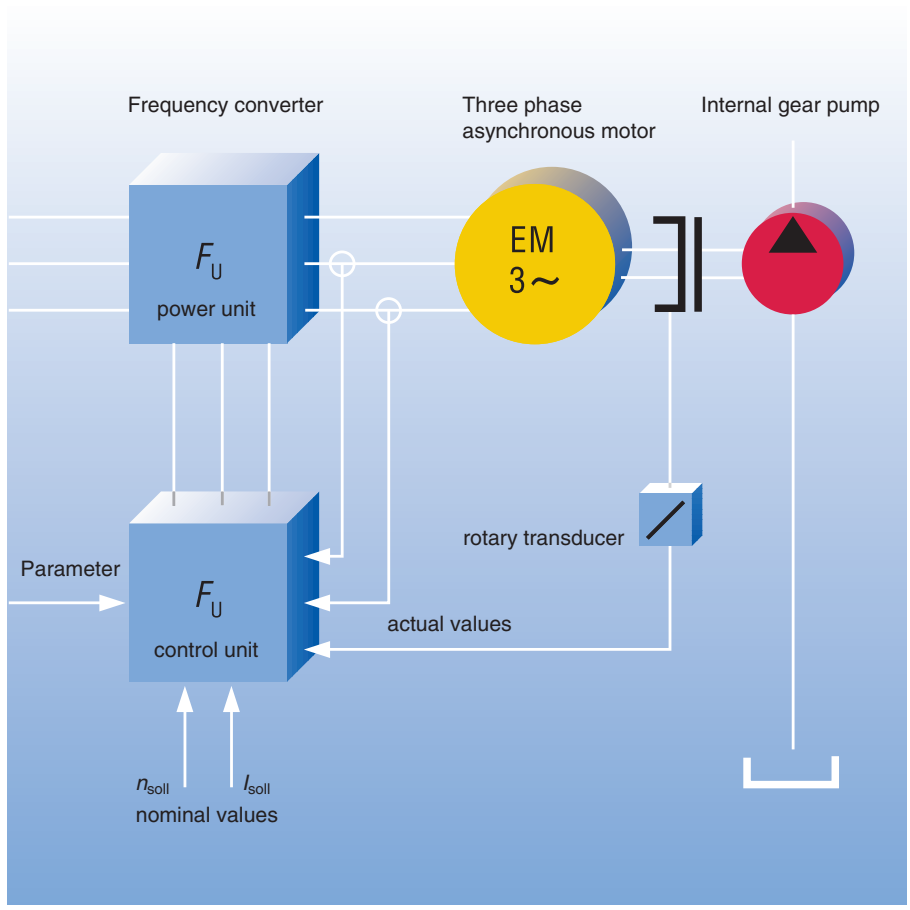

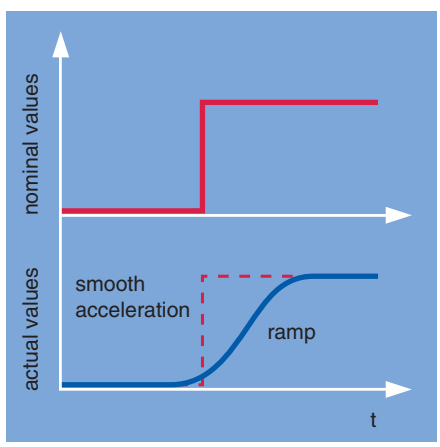

Voith EPA System Characteristics

Flow rate/speed characteristics

The flow rate required at a given time is set by changing the speed, ie. the control variable is the speed *n*.

$Q = V_g \cdot n$

Speed *n* is variable.

Displacement V_g is constant.

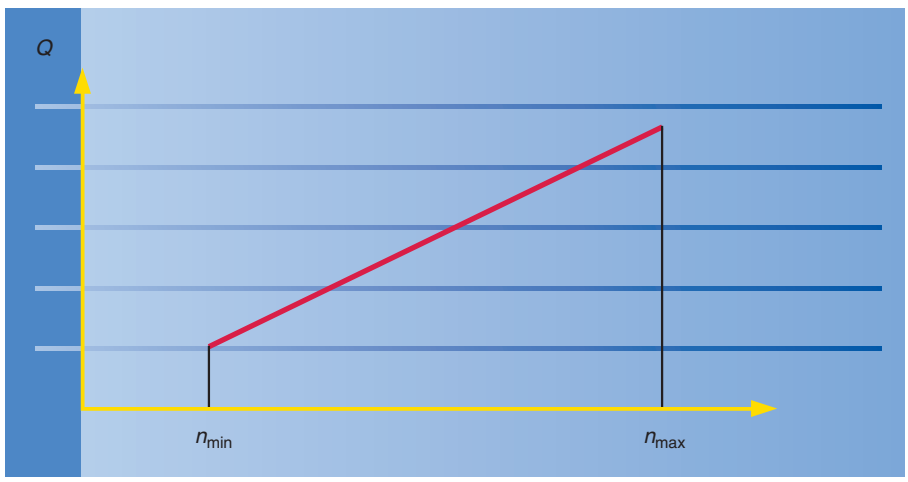

Pressure/flow rate characteristics

The maximum possible pressure $p_{max.}$ is limited on the one hand by the permissible pump pressure p and on the other by the maximum torque of the electric motor $M_{max.}$

$$p = \frac{M \cdot 2\pi}{V_g}$$

Q_{min} = *f* (n_{min} *and p*)
Q_1 = *f (magnetic flux saturation speed of the E-motor* n_1 *is at 1350 rev./min*$^{-1}$*)*
Q_{max} = *f* (n_{max})

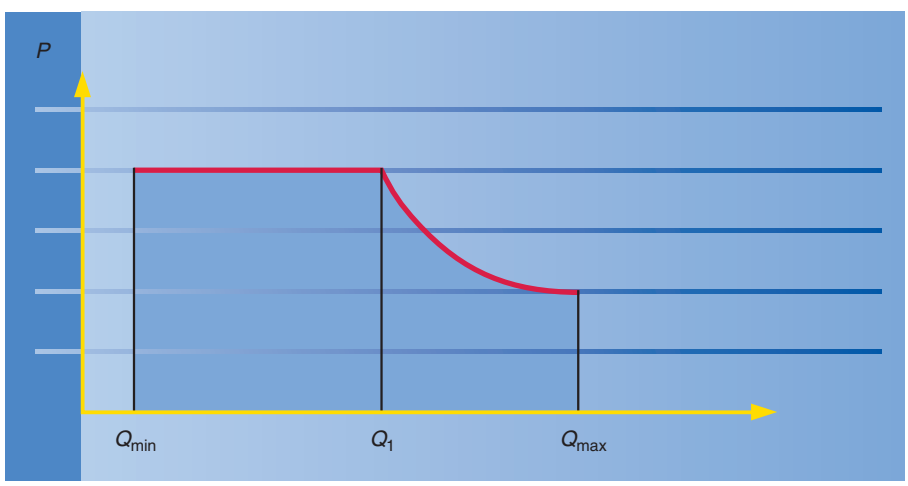

Efficiency of a speed-controlled pump IPV 5-64

η_{hm} = *hydraulic/mechanical efficiency*
η_v = *volumetric efficiency*

The graph values refer to a pressure $p = 200$ bar.

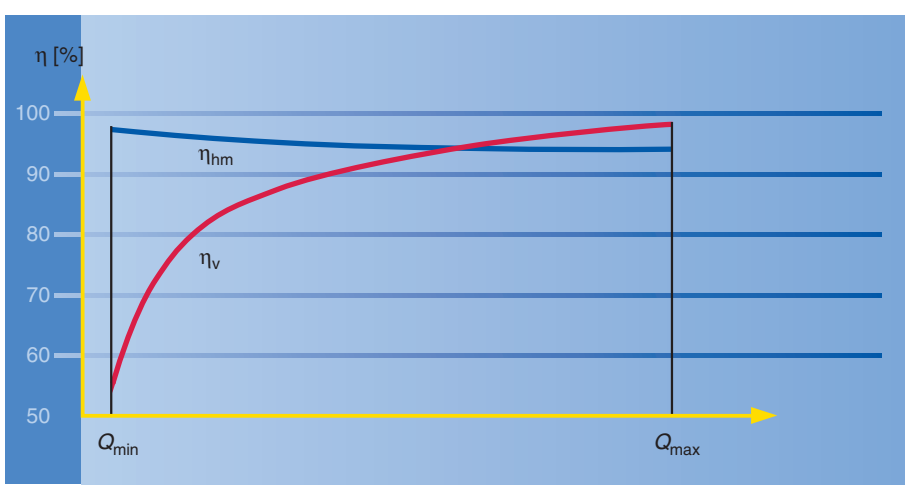

Voith EPA assembly
Design and selection

The modular design of the Voith EPA assembly permits effective adaptation to the required specification.

Available are electric motors with driving power ratings from 18.5 to 75 kW with special flange connections for the entire Voith internal gear pump programme. 6 displacements are available for each motor rating.

See Table page 6 for selection.

Combinations of internal gear pumps to form multiple-flow pumps are possible within the range of the given motor power.
For this, see „Configuration“ page 7.

For electric motor power ratings under 18.5 kW or higher than 75 kW, the internal gear pumps are connected to the motor via bell housings and flexible couplings. This also applies to multiple-flow pumps not listed in Table page 6. Please contact Voith Turbo GmbH & Co. KG. Department ahv.

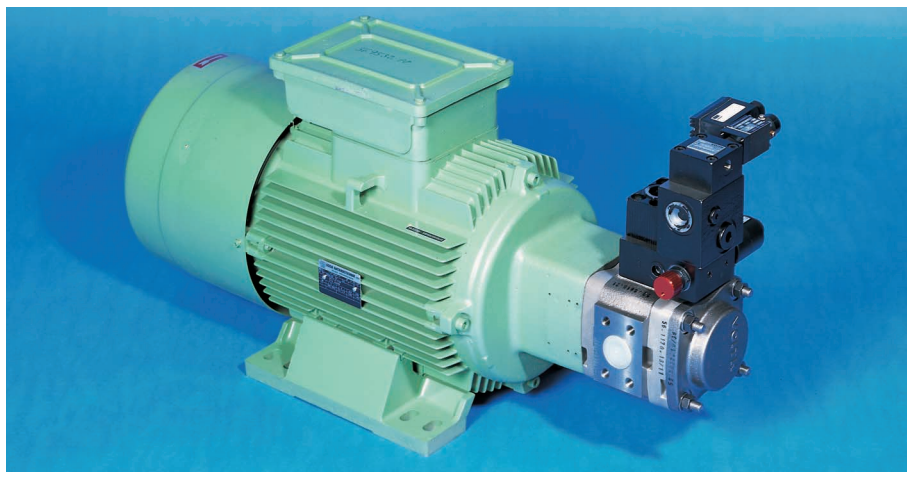

Code for Electricmotor-Pump-Assembly

EPA - 22 DF V 80 DBPE

- DBPE: Proportional pressure valve (optional)
- V 80: Displacement in cm³/rev. (Selection table page 6, dimensions page 11)
- V: Pump type (V = IPV, H = IPH)
- DF: Cooling fan
- DF: Incremental rotary encoder if for the frequency inverter necessary
- 22: E-motor rated power in kW (Selection table page 1, dimensions page 10)
- EPA: **E**lectric motor - **P**ump **A**ssembly

Technical data

Three phase asynchronous motor with squirrel cage rotor:
Rated power (see Table, page 6)
Rated speed 1 450 rev./min.
4 pole, degree of protection IP54, insulation class F
Voltage 400 V

Cooling fan:
4 pole, degree of protection IP54
Speed approx. 1 380 rev./min.
Voltage 230/400 V, 50/60 hz

Incremental rotary encoder:
2 500 pulses per rev. (TTL) RS 422
2 channels, electrically displaced by 90°, 1 zero pulse per rev.,
Supply voltage 5V DC ± 5%

High pressure internal gear pumps IPH or IPV
See page 11 for parameters and dimensions.

The minimal allowable speed is partially dependant of the pressure.

Please consult our technical staff.

Pressure relief valves DBV
With steplessly mechanical adjustment. With unloading by external pressure or 2/2-way solenoid valve. See page 9 for further details.

Proportional pressure valve with integrated electronics DBPE
Apart from the pilot assembly, DBPE valves are identical to DBV valves. Pilot control is by a proportional valve with integrated current controller.

Voith EPA assembly Electric motor – internal gear pump selections

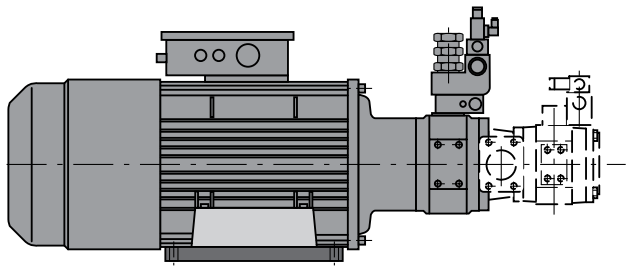

Detailed in the table are the E-motor - single pump combinations available as standard.

Also possible are electric motors with less than 18.5 or more than 75 kW power rating and combinations with multiple-flow pumps.

Please consult our technical staff for the allowable pressures at speeds lower than 400 rpm.

For higher speeds, pressures are to be determined in accordance with the specification.

Note:
The permissible peak pressures are based on a duty cycle of 15 % with a maximum sequence time of 1 minute. The continuous and peak pressures are not achievable in every combination.

EM-power [kW]	Pump-type	Displace-ment [cm³/U]	Speed [min⁻¹] max	Delivery [l/min] max	Continuous pressure[1] [bar]	Peak pressure[1] [bar]
18.5	IPH 4-20	20	3000	60	300	330
18.5	IPH 4-25	25	3000	75	250	315
18.5	IPH 4-32	32	3000	96	220	300
18.5	IPV 5-40	40	2800	112	176	264
18.5	IPV 5-50	50	2500	125	141	211
18.5	IPV 5-64	64	2200	140	110	165
22	IPH 5-40	40	3000	120	209	314
22	IPH 5-50	50	3000	150	167	251
22	IPH 5-64	64	3000	192	131	196
22	IPV 6-80	80	2400	192	105	157
22	IPV 6-100	100	2100	210	84	125
22	IPV 6-125	125	1800	225	67	100
30	IPH 5-40	40	3000	120	285	330
30	IPH 5-50	50	3000	150	228	315
30	IPH 5-64	64	3000	192	178	267
30	IPV 6-80	80	2400	192	143	214
30	IPV 6-100	100	2100	210	114	171
30	IPV 6-125	125	1800	225	91	137
37	IPH 5-40	40	3000	120	300	330
37	IPH 5-50	50	3000	150	250	315
37	IPH 5-64	64	3000	192	220	300
37	IPV 6-80	80	2400	192	176	264
37	IPV 6-100	100	2100	210	141	211
37	IPV 6-125	125	1800	225	112	169
45	IPH 6-80	80	2500	200	214	321
45	IPH 6-100	100	2500	250	171	257
45	IPH 6-125	125	2500	312	137	205
45	IPV 7-160	160	2000	320	107	160
45	IPV 7-200	200	1800	360	86	128
45	IPV 7-250	250	1800	450	68	103
55	IPH 6-80	80	2500	200	261	330
55	IPH 6-100	100	2500	250	209	315
55	IPH 6-125	125	2500	312	167	251
55	IPV 7-160	160	2000	320	131	196
55	IPV 7-200	200	1800	360	105	157
55	IPV 7-250	250	1800	450	84	125
75	IPH 6-80	80	2500	200	300	330
75	IPH 6-100	100	2500	250	250	315
75	IPH 6-125	125	2500	312	228	300
75	IPV 7-160	160	2000	320	178	267
75	IPV 7-200	200	1800	360	143	214
75	IPV 7-250	250	1800	450	114	171

[1] These pressures are with the given power achievable in the speed range 400 to approx. 1350 rpm.

Specification

Rated power E-motor

Sample calculation:

$$P_{EM} = \frac{V_g \cdot \Delta p}{380} \text{ [kW at 1500 rev./min.]}$$

V_g = [cm³ / U]
Δp = [bar]

With short-term peak loads:

$$P_{EM} = \frac{V_g \cdot \Delta p}{380 \cdot k_ü} \text{ [kW at 1500 rev./min.]}$$

$k_ü$ = peak load factor not exceeding 1.6

Motor specification:
Equations apply for the operating range from $n_{min.}$ to rated speed.

The rated speed cannot be fully utilised over the practical operating range. A speed (n_1) of 1 350 rev./min. can be assumed as a rough configuration estimate for 4 pole machines.

With higher speeds, observe the electric motor torque characteristics over the range $n > n_1$.

If, corresponding to the above formulae, the calculated or predetermined $\Delta p = \Delta p_1$ is designated for the speed range > n_1 the following pressure values apply:

For hydraulic power < E-motor rated power

$$\Delta p = \left(\frac{n_1}{n}\right)^{1,5} \cdot \Delta p_1$$

For hydraulic power > E-motor rated power

$$\Delta p = \left(\frac{n_1}{n}\right)^{2} \cdot \Delta p_2$$

See performance data calculation.

Performance data calculation

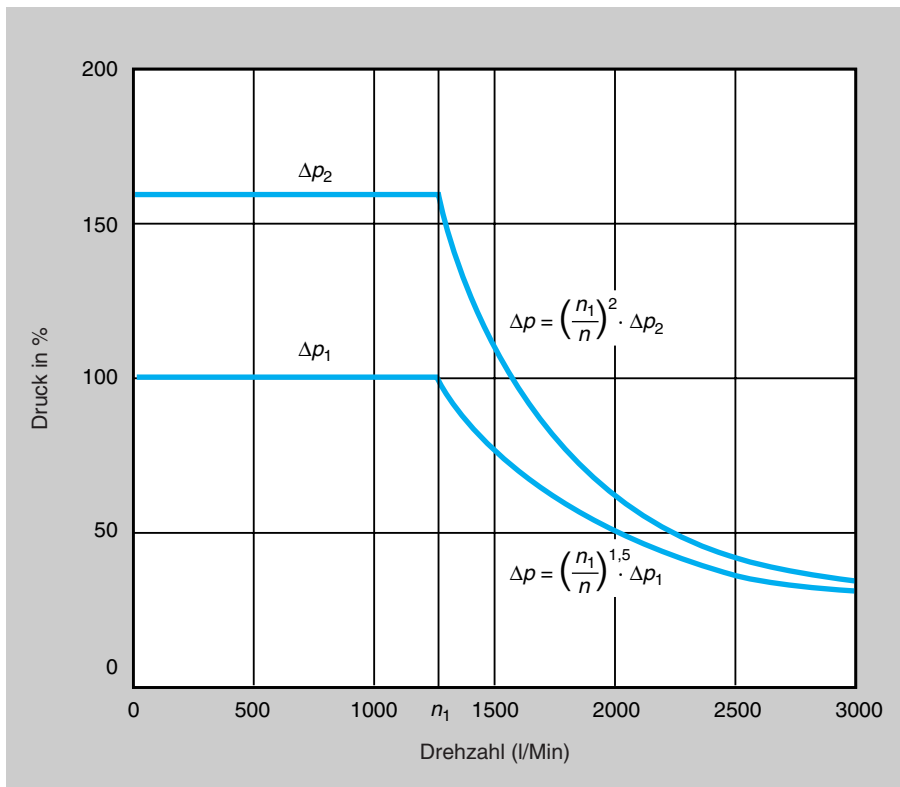

The hydraulic power is calculated according to the formula:

$$P = \frac{Q \cdot \Delta p}{600 \cdot \eta_g}$$

where $Q = V_g \cdot n \cdot \eta_v$ and η_g is the overall efficiency.

Q = Delivery in l/min.
V_{gth} = Displacement in cm³/rev.
n = speed in rev./min.
η_v = volumetric efficiency
η_g = overall efficiency
P = power in kW
Δp = pressure in bar

Frequency converter
The frequency converter must be configured for the maximum current of the electric motor at maximum operating pressure of the hydraulic pump.

Please note that the frequency converter also has a rated power and a limited overload current. Normally the overload current is limited by the installed I-t function, ie. a time component is permissible depending on overcurrent value. The peak maximum current is usually limited to 60 seconds.

IP pumps
Design

The most important design features are identical for high and medium pressure pumps: internal gear, plain bearings, radial and axial leakage gap compensation. This gives very low volumetric losses, an important requirement for speed-controlled applications.

The resulting smooth running and low pulsating delivery guarantees an extremely low noise level for the EPA system, especially at low speeds. A definite advantage between the EPA and other systems.

IPH Pumps

Peak pressures up to 330 bar

Displacement up to 125 cm³/rev.

Overall efficiency over 90% (from 100 bar)

Noise level, for example 68 db (A) at 300 bar, 75 l/min. and 1450 rev./min.

High permissible viscosity (up to 2000 cSt)

Very good suction capabilities

Further information on data sheet G 667e + G 1209e

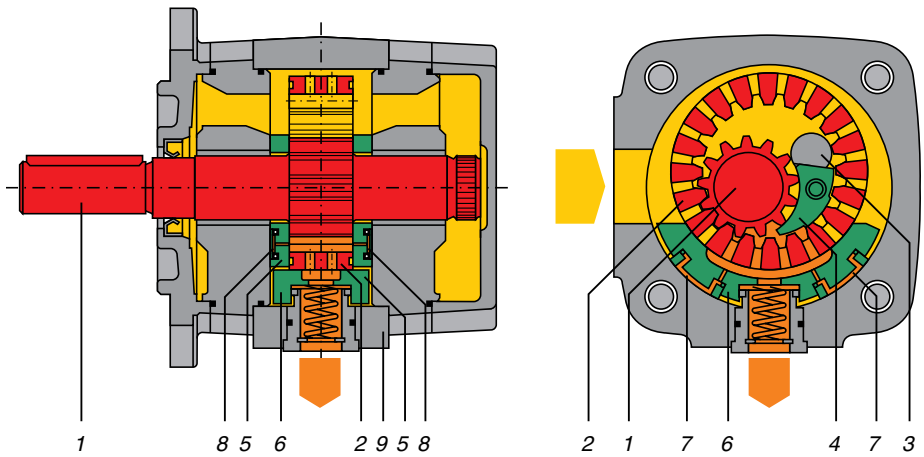

IPV Pumps

Peak pressures up to 345 bar

Displacement up to 250 cm³/rev.

Overall efficiency over 92 % (from 100 bar)

Noise level, for example 62 db (A) at 250 bar, 48 l/min. and 1450 rev./min.*

High permissible viscosity (up to 2 000 cSt)

Very good suction capabilities

Further information on data sheet G 1421e + G 1485e

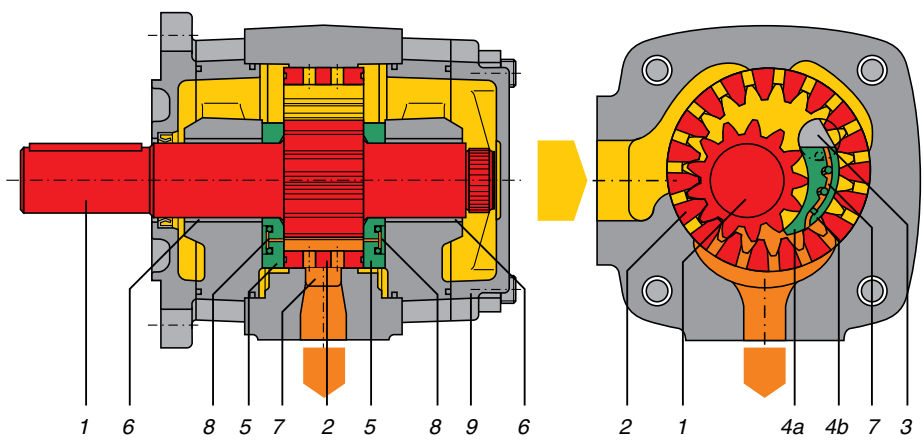

1 Pinion shaft
2 Ring gear
3 Filler pin
4 Filler
4a Filler segment carrier
4b Filler segment
5 Axial disc
6 Control piston (IPH only)
7 Radial pressure area
8 Axial pressure area
9 Housing

* Measured in a low echo room. Values are 5 db (A) lower measured in an anechoic chamber

DBV valves

Design and operation

Voith pressure relief valves ensure trouble-free operation with short response times, minimal pressure drop and low pressure peaks.

DBV valves are mounted directly to the pressure connection of the IP pumps.

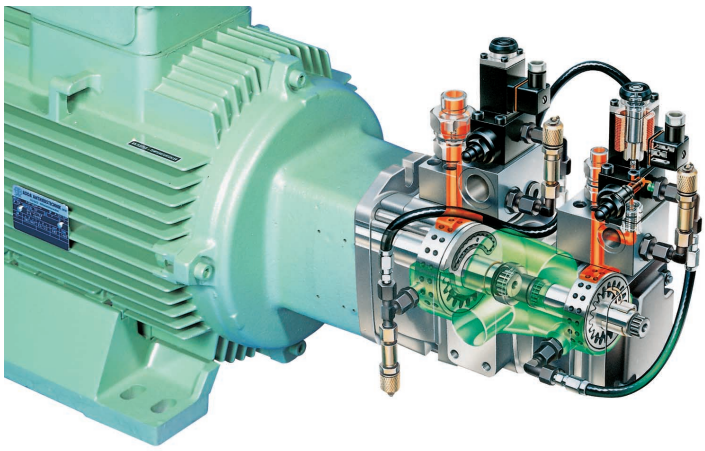

Hydraulic schemes

Types: DBV 10 DBV 20 DBV 30 DBV 40

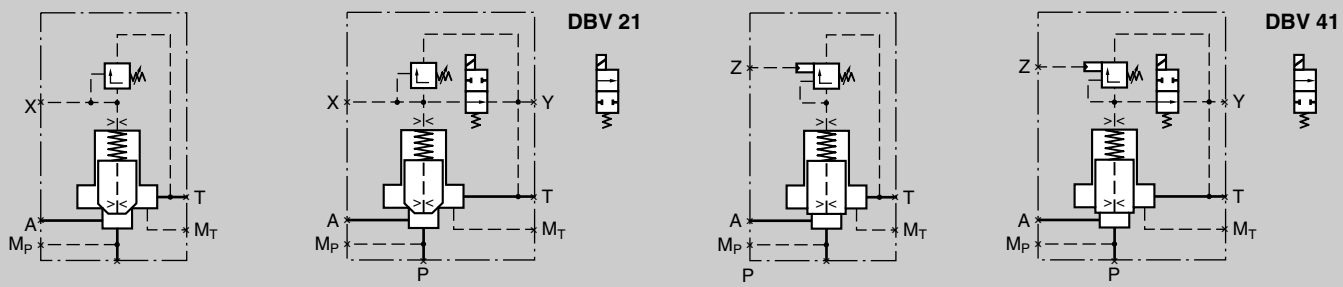

Dimensional Drawings

Types: DBV 10 DBV 30 DBV 20/21 DBV 40/41

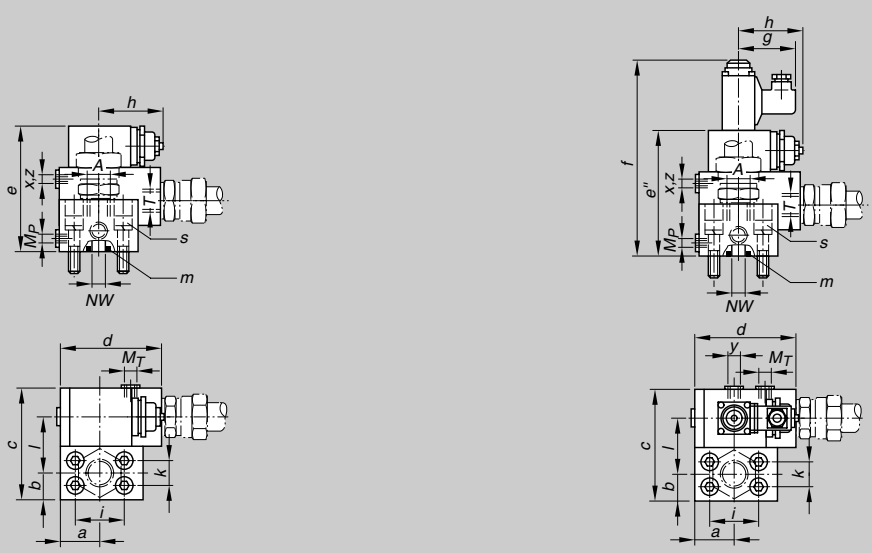

For more information, see data sheet G 818e Voith pressure relief valves.

Dimensions

Size	NW	a	b	c	d	e	e'	e''	e'''	f	f'	g	h	i	k	l	m[1)]	s[2)]	A, T	M_T M_P[3)]	P
E 10	10	40	20	88	80	80	90	95	105	177	187	58	64	38.1	17.5	44	18.64-3.53	M 8 x 50	G 1/2	G 1/4	SAE
E 16	16	37	24	100	82	90	100	105	115	187	197	58	64	47.6	22.2	52	24.99-3.53	M 10 x 35	G 3/4	G 1/4	SAE
E 25	25	37	24	119	90	128	130	128	130	210	212	58	64	52.4	26.2	64	32.92-3.53	M 10 x 40	G 1	G 1/4	SAE
E 32	32	48	31	137	120	145	150	145	150	227	232	58	72	70	36	75	37.22-3.53	M 12 x 45	G 11/2	G 1/4	SAE

DBPE valves

Design and operation

Apart from the pilot control, Voith pressure relief valves type DBPE are identical in construction and overall function to Voith DBV valves.

Pilot control is operated by a proportional pressure relief valve which in turn is supplied with an integreted current controller.

DBPE…200 **DBPE…320**

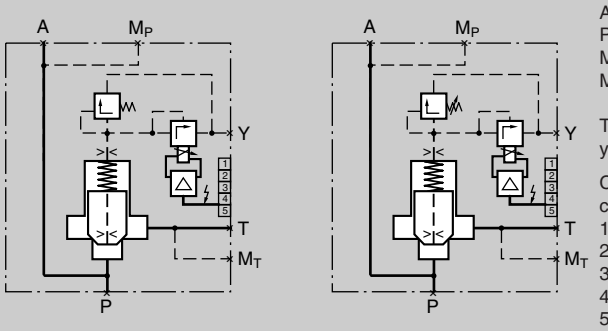

A	Operating cable
P	Intake
M_S	Pump pressure
M_T	Measuring connection Return pressure
T	Discharge
y, x, z	Control Drain line

Connections current controller:

1 =	OV U_S
2 =	Nominal value earth 0V
3 =	Nominal value 0-10 V
4 =	not assigned
5 =	U_S

with permanently set maximum pressure

with adjustable maximum pressure

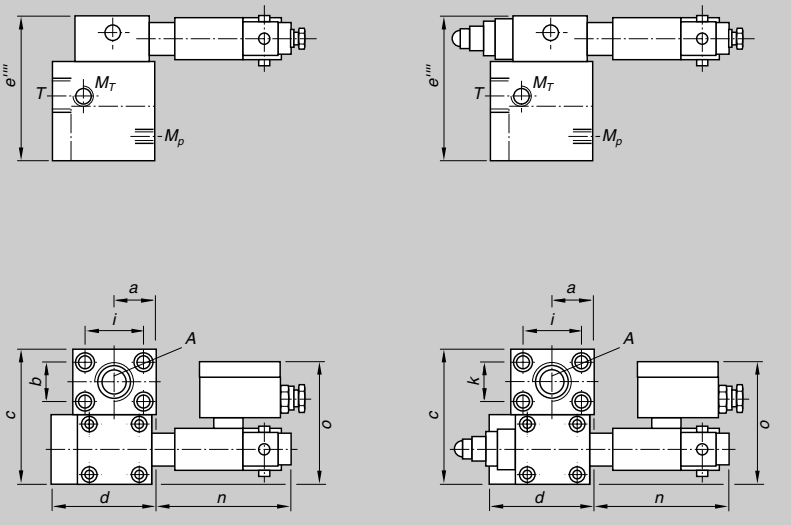

See also page 9 for dimensions.

n	*o*	*e''''*
112	102.5	95
117	102.5	105
117	106.5	130
117	107.5	145

Current controller

Technical data

The current controller serves to control a proportional solenoid with constant current.
It is plugged directly into a DIN 43650 plug connector. The main components of the controller are a voltage stabilizer, linear ramp shaper for positive and negative ramps, dither oscillator, fuse elements and a chopper power stage (f ~ 2.5 kHz).
The dither amplitude can be set with the „ripple signal“ potentiometer, the basic current with $I_{min.}$, the maximum current with $I_{max.}$, the ramp rise time with t_{up} and the ramp fall time with t_{down}.

The emergency cut-off function is achieved by interrupting the operating voltage.

Technical data voltage controller	
Operating voltage U_s	18 - 32 V
Residual ripple	< 10 %
Output current	2.4 A
Temperature drift	< ± 0.1 von I_{max}
Voltage dependency	< ± 0.3 % von I_{max}
Basic current	02…2 A
Maximum current $I_{max.}$	I_{min} + 0…2.4 A
Fuse	TR 5 F2 A
Dither frequency (optional)	50 / 100 Hz
Dither amplitude (adjustable)	0…750 mA
Stabilized voltage (terminal 4)	15 V ± 0.3 V
Loading capacity max.	< 5 mA
Nominal value signal (terminal 3)	0…8 V / 0…10 V
optional	0…20 mA
Ramp rise and fall time (separately adjustable) referred to nominal value signal 0 ... max.	0.1 ... 7 s
Temperature range	-20° C…+70° C
Connection to modular terminal block (via union thread 11)	5 pole
Connector cross section	1.5 qmm, fine wire
Degree of protection	IP 65

Electric motors

Dimensions

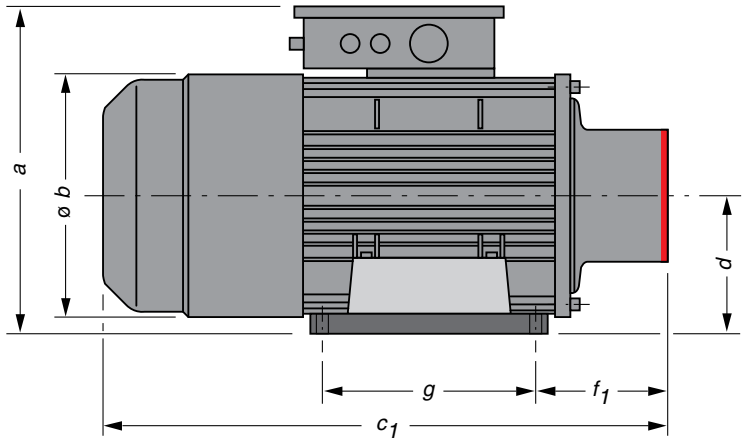

EPA Size	Rated-power [kW]	Dimensions					
		a	*b*	c_1	*d*	f_1	*g*
EPA 18	18.5	427	324	752	180	173.5	241
EPA 22	22	427	324	752	180	173.5	279
EPA 30	30	486	358	860	200	227.2	305
EPA 37	37	530	396	931	225	236.7	286
EPA 45	45	530	396	931	225	238	311
EPA 55	55	585	445	1028	250	234.5	349
EPA 75	75	663	515	1139	280	275	419

Pumps marked red can be flange-connected directly to the motor.

Note:

Please enquire as to configuration and dimensions for combinations not shown in Table page 6.

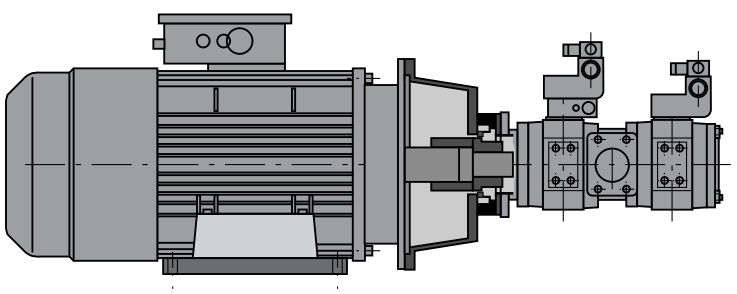

IP pumps

Typical values and dimensions

Note:
The permissible peak pressures are based on a duty cycle of 15 % with a maximum sequence time of 1 minute. The continuous and peak pressures are not achievable in every combination.

Principal dimensions in mm.

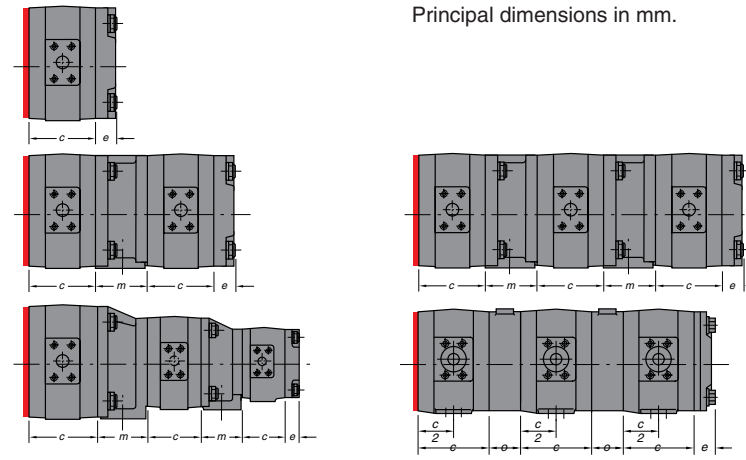

Basic type and size	Displacement cm³/U	Speed rpm min	Speed rpm max	Delivery l/min at 1500 rpm	Pressures bar Continous pressure	Pressures bar Peak pressure	Weight kp	Dimensions mm c	Dimensions mm e	Dimensions mm m
IPH 4-20	20.7	100	3000	31.0	300	330	13.5	102	40	66-70
IPH 4-25	25.7	100	3000	38.6	250	315	14.2	108	40	66-70
IPH 4-32	32.3	100	3000	48.5	250	300	15.0	116	40	66-70
IPH 5-40	40.8	100	3000	61.2	300	330	26.8	138	44	80-90
IPH 5-50	50.3	100	3000	75.4	250	315	28.3	145	44	80-90
IPH 5-64	63.9	100	3000	95.8	250	300	30.0	155	44	80-90
IPH 6-80	81.3	100	2500	121.9	300	330	50.5	171	50	90-110
IPH 6-100	101.6	100	2500	152.4	250	315	54.0	181	50	66-110
IPH 6-125	125.9	100	2500	188.8	250	300	58.0	193	50	90-110
IPV 3-3.5	3.6	100	3600	5.4	330	345	4.0	66	20.5	45
IPV 3-5	5.2	100	3600	7.8	330	345	4.2	70	20.5	45
IPV 3-6.3	6.4	100	3600	9.6	330	345	4.4	73	20.5	45
IPV 3-8	8.2	100	3600	12.3	330	345	4.6	77.5	20.5	45
IPV 3-10	10.2	100	3600	15.3	330	345	4.8	82.5	20.5	45
IPV 4-13	13.3	100	3600	19.9	330	345	8.6	88.5	31	66
IPV 4-16	16.3	100	3400	24.4	330	345	9.0	92.5	31	66
IPV 4-20	20.7	100	3200	31.0	330	345	9.6	98	31	66
IPV 4-25	25.4	100	3000	38.1	300	330	10.2	104	31	66
IPV 4-32	32.6	100	2800	48.9	250	280	11.0	113	31	66
IPV 5-32	33.1	100	3000	49.6	315	345	15.5	119	36	80-90
IPV 5-40	41.0	100	2800	61.5	315	345	16.3	125	36	80-90
IPV 5-50	50.3	100	2500	75.4	280	345	17.4	132	36	80-90
IPV 5-64	64.9	100	2200	97.3	230	250	18.7	143	36	80-90
IPV 6-64	64.1	100	2600	96.1	300	330	29.2	140	40	90-110
IPV 6-80	80.7	100	2400	121.0	280	315	30.7	148	35	90-110
IPV 6-100	101.3	100	2100	151.9	250	300	32.6	158	35	90-110
IPV 6-125	126.2	100	1800	189.3	210	250	35.0	170	40	90-110
IPV 7-125**	125.8	100	2200	188.7	300	330	46.5	152	48	110-140
IPV 7-160**	160.8	100	2000	241.2	280	315	50	162	48	110-140
IPV 7-200**	202.7	100	1800	304.0	250	300	54	174	46	110-140
IPV 7-250**	251.7	100	1800	377.5	210	250	59	188	42	110-140

** from 90 kW

Certified Voith quality

The Voith high-pressure, medium-pressure and low-pressure pumps with internal gears are certified to DIN/ISO 9001.

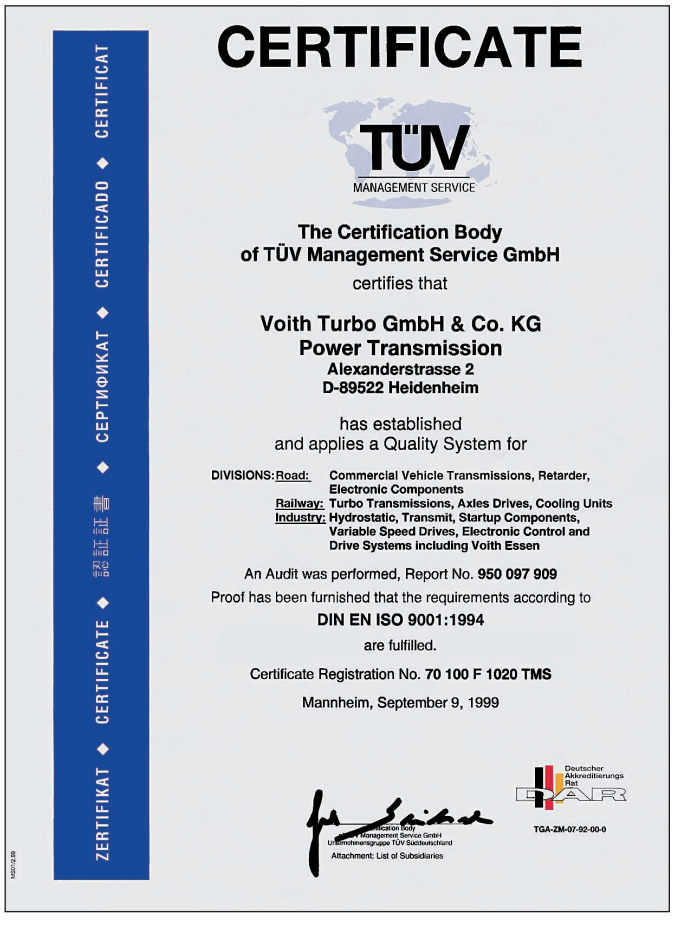

ZERTIFIKAT ◆ CERTIFICATE ◆ 認証証書 ◆ СЕРТИФИКАТ ◆ CERTIFICADO ◆ CERTIFICAT

CERTIFICATE

TÜV
MANAGEMENT SERVICE

The Certification Body
of TÜV Management Service GmbH
certifies that

Voith Turbo GmbH & Co. KG
Power Transmission
Alexanderstrasse 2
D-89522 Heidenheim

has established
and applies a Quality System for

DIVISIONS: Road: **Commercial Vehicle Transmissions, Retarder, Electronic Components**
Railway: **Turbo Transmissions, Axles Drives, Cooling Units**
Industry: **Hydrostatic, Transmit, Startup Components, Variable Speed Drives, Electronic Control and Drive Systems including Voith Essen**

An Audit was performed, Report No. **950 097 909**
Proof has been furnished that the requirements according to
DIN EN ISO 9001:1994
are fulfilled.

Certificate Registration No. **70 100 F 1020 TMS**

Mannheim, September 9, 1999

Deutscher Akkreditierungs Rat
DAR
TGA-ZM-07-92-00-0

Attachment: List of Subsidiaries

Voith Turbo GmbH & Co. KG
Produktgruppe Hydrostatik
P.O, Box 2030
D-89510 Heidenheim
Tel. ++ (73 21) 37-45 73
Fax ++ (73 21) 37-78 09
E-Mail hydrostatik@voith.com
http://www.voithturbo.com

Responsible agent

VOITH
GROUP OF COMPANIES

G 1420 e 2.02 500 WA/KO Printed in the F.R.G. at Voith Heidenheim.
Approximate dimensions and sketches. Subject to modifications.